Lightning Slinger

30TH ANNIVERSARY
TURKEY CREEK
1985-2015

Turkey Creek Division

VOL 29 NO. 12

MONTHLY PUBLICATION OF THE TURKEY CREEK DIVISION
OF THE MID-CONTINENT REGION, NMRA

December 2015

Our Christmas gathering, spouses invited, including Miles, will be in the "cafeteria/commons" of Hocker Grove Middle School. We do not have access to clean-up areas so we will have to restrict any selection of food trays to something like "finger foods". Probably not practical to bring salads, slaw or dishes which must be served with "spoons and forks". We plan to have coffee, bottled water and canned soda. We will have paper plates to hold brownies, cookies, nuts, celery, carrots or whatever else you can think of in similar nature.

MIDWEST MEANDERINGS-II

This PowerPoint® presentation was created from photographs taken by Ron Morse in Kansas, Missouri and Arkansas. This show has been recently updated with numerous new photos. This show includes scenic shots from all fours seasons and includes everything from butterflies to deer, sunsets, snow, flowers, fall leaves, birds, moon shots etc., etc. This is really a beautiful show aimed at the Nature Lover.....

Substitute Superintendent & Clerk's Report

Hello,

Regarding our meeting November 24th at Hocker Grover Middle School:

Announcement … Kevan Vemside, an old time member of Turkey Creek, has passed away.

Announcement … Louis Selbel notes we do have tables at the Great American Train Show to be March 2016, at downtown American Royal building. Louis needs at least 2 to 3 volunteers to help man Turkey Creek tables and do "clinics" if possible. Turkey Creek will get $50 for clinics.

Greg Hatch questioned the continued use of the SMSD school facilities and will investigate other "centrally located" facilities we could rent at better pricing. Currently we pay $30 to $40 per month to rent SMSD school facilities. November our cost was $25. October cost was $31.25, for reference. Look forward to Greg's findings.

Discussed the up and coming Make & Take Clinic. The final sign-up sheet is attached. If you did not get signed up and want to participate, contact Larry Diehl or Ray Brown or Dale Phetteplace immediately. Also, if you have not paid, please arrange to pay the $10 fee soon.

Bernie VanCleave brought up questions and discussion regarding "Neodymium" rare earth magnets as uncoupling devices in trackwork. Hs anyone had experience with such applications? Please write in responses on your positive or negative experiences. Bernie provided information for us to publish, see attached sheets.

Voting was held and there were some "hard fought battles" to win officer positions with Turkey Creek for 2016!

Good thing Ray Brown had a good campaign manager, "Chicken Man". He was nominated and motion to accept by Gary Hankins; 2nd by Louis Selbel. Unanimous vote in favor to accept Ray Brown as 2016 Superintendent.

Bill Humenczuk also fought a hard campaign, but with "Chicken Man's" advice, Bill promises to battle the IRS for model railroad tax credits! Pat Harriman made motion to accept Bill as our 2016 Paymaster; Gary Hankins' 2nd the motion and the motion carried with unanimous vote in favor of Bill. Good Luck Bill Humenczuk.

Louis Selbel elected to run for Clerk. Also a tough campaign but no speeches and no promises! Regardless, Greg Hatch made motion to approve Louis as 2016 Clerk; 2nd by Gary Hankins. Again, nearly unanimous vote in favor of approving Louis, except Louis' wife who sent a "no vote" over the airways (wait a minute, Louis' wife is not a Turkey Creek member). Well then, Louis is deemed to be unanimous "yes".

Congratulations to all our new officers. We all look forward to a successful and fun 2016.

Presentation -

Brad Moreau made a fine presentation on track controls he has designed and constructed for his railroad. Brad discussed the "where's and why fors" of his designs and the practical aspects of constructing the fascia controls. Copies of some of Brad's slides will be attached, if received.

December Christmas Show ...

Ron Morse has agreed to make a very colorful slide show he calls ***"Midwest Meanderings - II"*** :

Our Christmas gathering, spouses invited, including Miles, will be in the "cafeteria/commons" of Hocker Grove Middle School. We do not have access to clean-up areas so we will have to restrict any selection of food trays to something like "finger foods". Probably not practical to bring salads, slaw or dishes which must be served with "spoons and forks". We plan to have coffee, bottled water and canned soda. We will have paper plates to hold brownies, cookies, nuts, celery, carrots or whatever else you can think of in similar nature.

Happy Holidays.
Ray Brown,
and substitute "super for a day", Larry Diehl

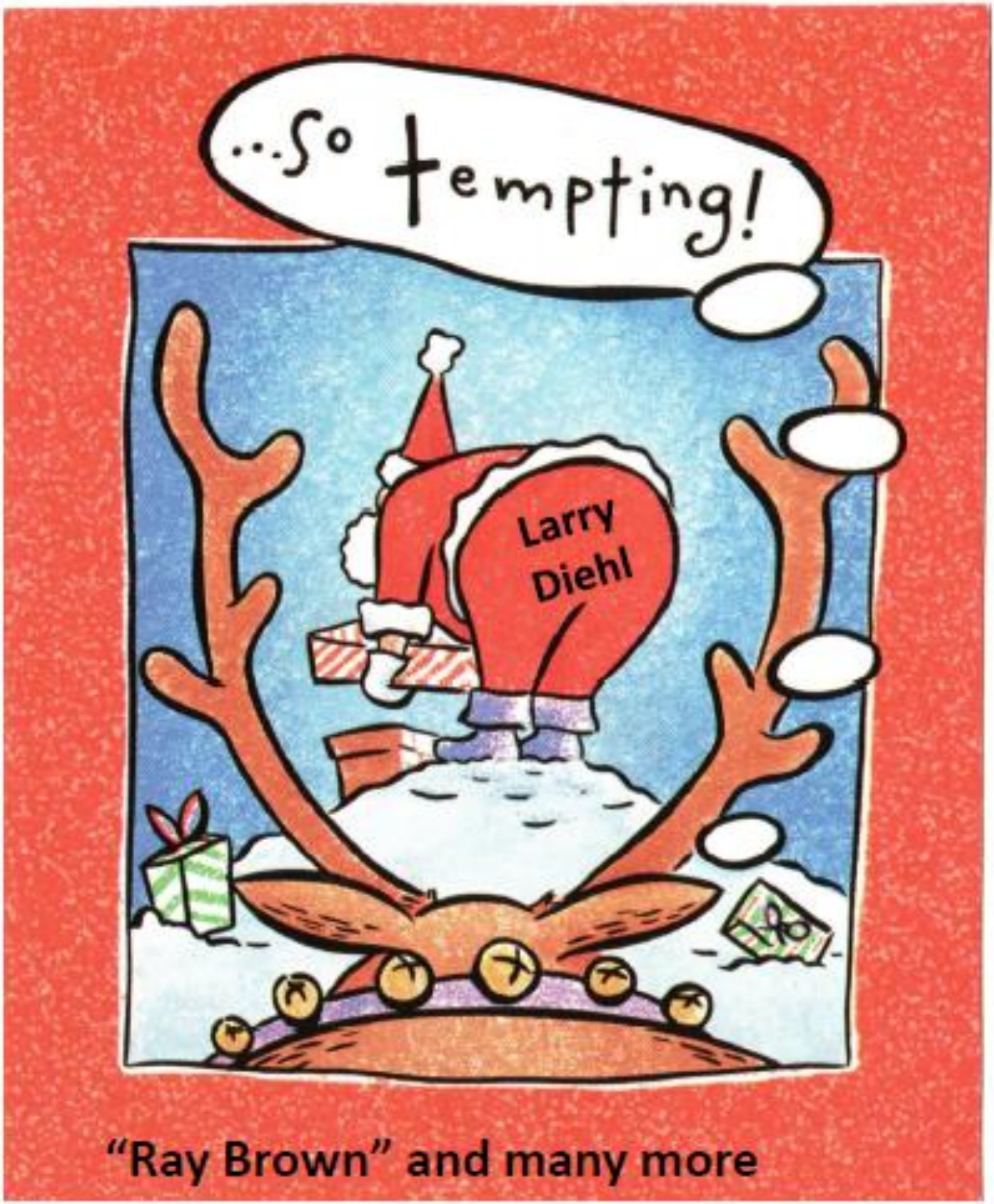

"Ray Brown" and many more

The Black Rock Chronicle

Serving Black Rock and Bitterroot Pass Communities

Volume and issue – Holiday Edition TUESDAY, December 8, 2015

Make & Take Clinic

Those registered for the Make & Take Clinic …

			WM Draw S-1	S-2	A	C	D	E
	Doug DeBerg - tracktalk1@aol.com	yes	X HO					
pd	Bill Humenczuk - bhumenczuk@kc.rr.com	yes	X "5"					
pd	John Fales - jtf@kidzdentist.com	yes	X HO					
pd	Marty Vaughn - wmvaughn@mchsi.com	yes						
pd	(2) Bill Scheererer - wjscheer@swbell.net	yes	X O X HO					
pd	Lee Kirchhoff - leak1@outlook.com	yes						X HO
pd	Joe Robertson - pipewal@aol.com	yes		X HO				
	Charles Yas - cyaw@kc.rr.com (confirm scale?)	yes		X HO				
pd	Jack Ferris - fhs1955@gmail.com	yes	X O					
pd	Ken Jenkins - highline69@sbcglobal.net	yes		X HO				
pd	Mark Juett - j.mark.juett@gmail.com	yes	X HO					
pd	Louis Seibel (confirm scale?)	yes		X HO				
pd	Dale Phetteplace	yes	X HO					
pd	Larry Diehl	yes	X HO					
	Ray Brown	yes	X O					
pd	Jim Larson - larsonikc@gmail.com	yes	X HO					
pd	(2) Larry Alfred	yes	X O	X O				
pd	Robert Spurgat	yes	X O					
pd	Paul Evans	yes	X HO					
pd	Jim Henry	Yes			HO			
pd	Jim Henry	Yes					HO	
pd	Jim Henry	Yes						HO
pd	Harry Midgley - harrymidgley@gmail.com	Yes				X HO		
pd	Kent Hurley					X HO		
pd	Shelly Levy			X O				

If you note any errors, please email ldiehl066@gmail.com

Volume 10 Number 9 BLESSINGS TO YOU THIS CHRISTMAS SEASON December 2015

Prairie Ponderings

For the enjoyment and edification of model railroad operators

Boise Cascade purchases Carpenter Lumber and Jordan Farm; begins Lakeville operations

The long-expected arrival of a competitor to Wausau Supply in Lakeville took place last month, adding another major receiver and distributor of building products to the Airlake Terminal Railway. The addition is certain to boost PGR revenue.

Boise Cascade Building Materials will provide PGR with as many carloads to Lakeville each month as Grupo Cementos de Chihuahua (GCC) the Mexican-owned cement firm that ships bulk cement via 100 ton Trinity covered hoppers bearing DM & E reporting marks.

Boise Cascade's new complex, which includes the former Carpenter Lumber facility, dominates the north end of Airlake Terminal Railway in Lakeville

Before ... and after Jordan Farm quickly relocated from north of the industrial park in Lakeville to near the Highview Avenue grade crossing following the sale

First year of operations on Progressive Rail features 35 different crew members, nearly two sessions per month

Due to a marathon five session operating weekend, PGR events entertained and challenged nearly three dozen new friends and fellow model train owners and operators this year, four crew members at a time. Ops sessions date back to late winter.

The small layout, housed in a modest 11 1/2' x 15' spare bedroom (plus "rights" to another 6' x 1' shelf in the Jack and Jill bathroom) saw several milestones during its inaugural year:

- addition of sound and braking function (F6) to six additional (now all of the) locomotives, courtesy of Keith Robinson
- custom paint and decal of all five PGR locomotives (plus DM&E 6363 used for the CPR turn from the Twin Cities to Northfield) by Eric Carlson of Crooks, SD
- addition of a Northfield to Cannon Falls turn by PGR (see above right image)
- rerouting of the Cannon River, necessitating a railroad bridge to allow PGR's Faribault turn to service the industrial park
- 100% completion of the scenery work
- Two dozen excellent custom-made trees (below, center) donated by Russ Hayden

(above) #74 pulls in to Northfield with the Cannon Falls turn. Below, #37 crosses the Cannon River on its way to serve the Faribault industrial park

With the entire layout landscaped and the five session operating weekend successfully completed, Progressive Rail appears ready to host guests during three sessions at Prairie Rail in February. A couple more sessions before then will allow new and old friends an opportunity to enjoy the fellowship and camaraderie so evident throughout the KC Metro area. Thanks for including me in this great hobby.

This SD38-2 locomotive, parked for an extended period at Highview grade crossing, sparked local scrutiny

Following a stern response from local city official Jeff Otto, the local constabulary was more evident at Highview Ave.

YM Bob Willer enjoyed Northfield, while his opinion of working the Lakeville job remains that it is "a pain ..."

PGR SD38-2 #42 pulls past the freight office on its way back into Northfield Yard after serving Lakeville

Local residents (background) celebrated Oktoberfest beyond the Munich beer car on the diamond, while #37 finishes switching Faribault industries

Malt O Meal provided the most carloads for Progressive Rail during its first year of operations, a trend expected to continue well into the foreseeable future.

Crews this summer included long-time friend Tim Smith (DAIR trainmaster in town for training) who worked the yard while road engineer and new Kansas City mentor Chuck Hitchcock brought his train in to Northfield last August

Stalwarts Mike McLain and Doug Elder (Doug built the below detection system necessary for successful operations in and out of the Twin Cities staging area) concentrate on making pickups at the Airlake Terminal Railway located -in Lakeville

The Sunday night operating crew of John, Rick, Dave, and Mike looked like the superintendent felt at the end of five session pre-Prairie Rail prep held during a 72 hour period November 5-8

Behind-the-scenes in Twin Cities staging

A hearty thank you to all of you!

My sincere thanks to each of you who invited me to your Kansas City area layouts during the past year and a half. Don Ball, Chuck Hitchcock, Mike McLain, Bob Willer, Dave Acheson, Mike Porter, Mike Fyten, Rick McClellan, Joe Kasper, John Breau, Jim McCroskie, Michael Borkon, Jeff Needham, Kevin Leyerlie, Mark Steenwyk, Roger Ziegenhorn, Eric Goodman, Stephen Priest, Jon Percy, Doug DeBerg, Mike Tomei, Doug Taylor, and Ken Jenkins have all, at one time (or more) invited me to visit their home, see their layout, and/or to operate—some of you even invited me back more than once (I think that's under the guise of "do it until you get it right"). Look forward to seeing you again during 2016.

Recessed Control Panels

By Brad Moreau, MMR

Control panels for model railroads come in an infinite variety of shapes, sizes and approaches. All are constructed to control a portion of a model railroad or the whole thing. Sometimes a model railroader will rely entirely on manual controls like manual switches to control individual turnouts, other modelers will use a single toggle switch mounted conveniently in the layout fascia to control a key turnout.

Control panels have been used since the early days of model railroading as a means to control electrical blocks in the DC environments we had before DCC. Some of these were very elaborate and most were designed to provide centralized control for the entire model railroad.

In today's DCC friendly environment, large centralized control panels are not necessary as layouts are more often designed for walk-around operations. Model railroads like these require control over localized sets of turnouts rather than the whole model railroad.

My clinic is aimed at localized control for sets of turnouts and other functions an operator would logically need to control while operating his/her train through my layout.

My Control Panel Evolution

My first control panels were created to run my DC controlled layout. They were meant to control my layout from one central point. They were also rather large as I was getting used to the space required to wire various components together. (See fig. 1)

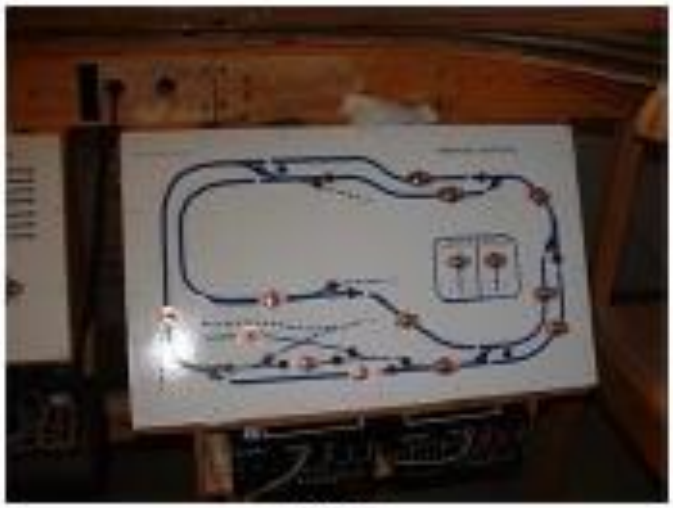

(Fig. 1)

When I decided to build my new layout, I designed it as a non-centralized DCC layout. This means I expected operators to walk around and control switches as they encountered them. This meant breaking the control panels up into smaller more compact control areas. I also decided to create panels that could be viewed while standing close to the fascia. To accomplish this, I decided to recess the panels and tilt them back so they could more easily be seen. I also wanted panels that were harder to snag with clothing etc. as people moved through the layout room. Finally, I wanted a more finished look for my railroad. My first recessed panel accomplished this. (See fig. 2)

(Fig. 2)

I built 3 more custom recessed panels for my main yard and turntable/roundhouse.

Standardization

Since I had decided to control all of my turnouts with Tortoise switch machines, I knew I would have to create control panels throughout the layout. As I started working on the mainline section of my model railroad the following things occurred to me:

a) Most of the control areas would be 1 – 3 turnouts unlike my main yard which has 16.
b) There would be quite a few individual control panels.
c) I didn't want to make custom recessed pans for each panel.
d) A standard size panel would look more appealing and be easier for operators to use.
e) Not only would the panels be standardized, I also wanted recessed pans for all of my Digitrax throttle jacks.

I settled eventually on three types of panels. A 4 x 3 inch panel for 3 or less turnouts a 6 x 3 inch panel for up to 6 turnouts and a recessed panel for the throttle jacks. (See fig. 3)

(Fig. 3)

The 4 x3 inch and the 6 x 3 inch panels share the same side pieces that comprise the "pan" that the panel sits in.

(Fig. 4)

When I decided to create standard panels, I also had to determine the dimensions of the panel pans. To do this I created several revisions using the drawing tool Visio. I printed them out on light cardboard and taped them together. I was then able to see if the panel was going to be visible as I stood close to the fascia and if it had enough clearance to see the panel. Other considerations were the amount of space the pan took up on my fascia.

3

This was especially important where multiple panels were installed. I went through 4 separate versions before I finally settled on the one I'm using today. I lettered them A – D with "D" being the final. (See fig. 4 for versions)

The final drawings for my type "D" ended up like this: (See fig. 5) I cut the sides and backs out of 1/16" matte board (the same used to frame pictures) and the panel, panel frame and connection blocks from hard-board (Masonite) These could have been made completely from matte board by simply doubling the panel face. Figure 5 shows all of the pieces prior to assembly of one standard frame.

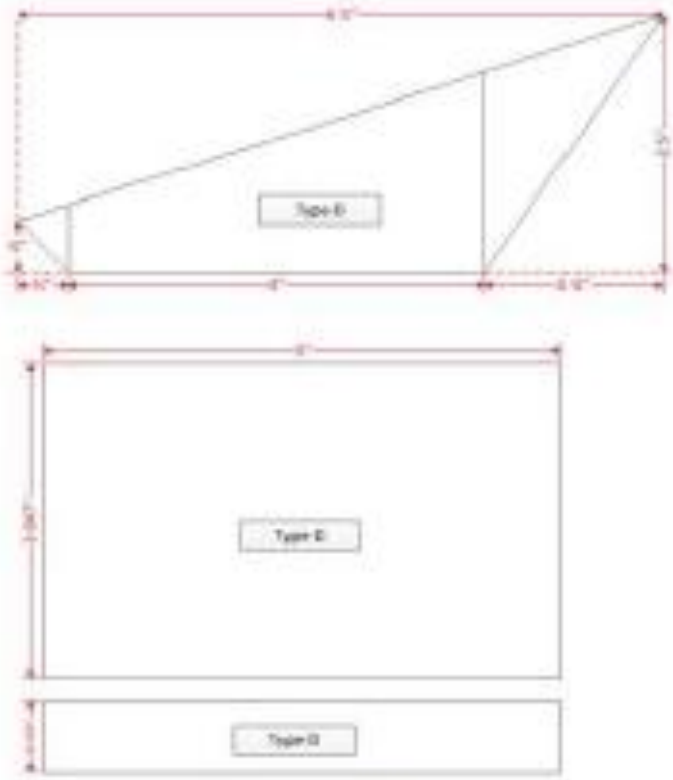

(Fig. 5)

(Fig. 6)

Control Panel Creation

Now that we have the panel pans created, let's discuss how I create the actual control panel faces. I use Visio to create three separate diagrams. The plotting diagram, the panel face and the protective clear plastic cover (transparency). Most drawing tools would work for this; the important thing is the process.

The first thing I do is create what I call a plotting diagram. This is a drawing the same size as the hardboard panel where I "plot" the track schematic and associated controls. I have various switches, LEDs and other controls measured. I need this information so I don't overlay a control and leave enough space for the controls. This diagram also shows where the mounting tabs are so I don't plot any controls over them. See figure 7.

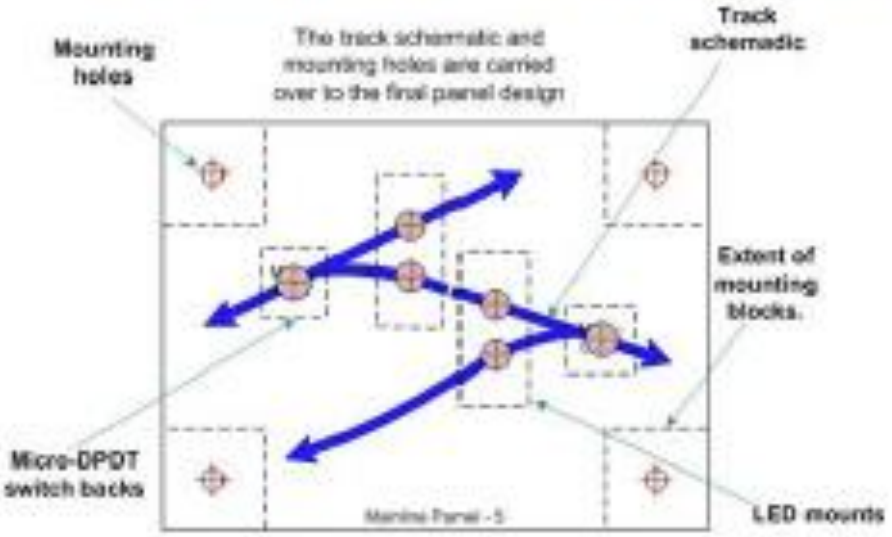

(Fig. 7)

Once I'm satisfied with the plotting diagram, I copy it over to the panel face drawing. I remove all of the dashed line items leaving the track schematic, switch, LED and mounting holes. I then add a standard "frame" I've created that has my railroad logo, panel number, panel location and other details. See figure 8.

(Fig. 8)

The next step is to create the reverse transparency diagram. This is used as a cover for the panel face to keep it from being smudged while the panel is in use. This has worked well so far, but I'm afraid the printable transparencies are getting harder to find. Other clear materials could be used, even packing tape. The important

thing is to protect the control panel face. I create the transparency diagram by copying the plotting diagram over, then removing everything except for the mounting holes and any switch holes. The LEDS will lie below the surface of the cover so are not included in the transparency. I then take and reverse the diagram. This is done so when it's printed the non-print side is the side facing out. See figure 9.

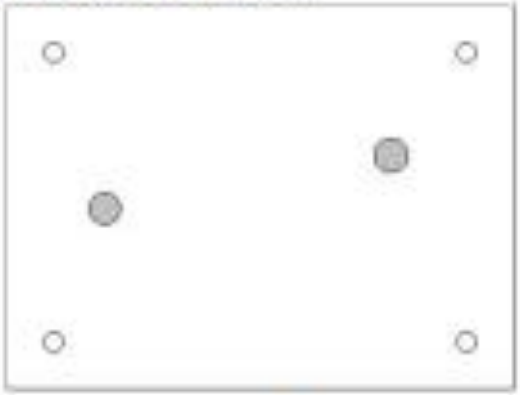

(Fig. 9)

Now I cut out all three diagrams very carefully including all of the holes. I use a large pin to start the holes on the plotting diagram. I then take the plotting diagram and tape it to the hardboard panel using blue painters tape. I drill pilot holes in all of the switch, LED and mounting holes right through the plotting diagram using a 1/16" bit in my drill press. The next step is to hot glue ½" wide hardboard blocks over the LED holes. I do this step to double the panel from 1/8" to ¼" which is the thickness of the LEDs I use. I use hot glue as it dries quickly. I now go back to the drill press and drill out the holes to their correct diameter using Brad-Point bits. These have a point that aligns with the pilot holes. Figure 10 shows the completed drilling.

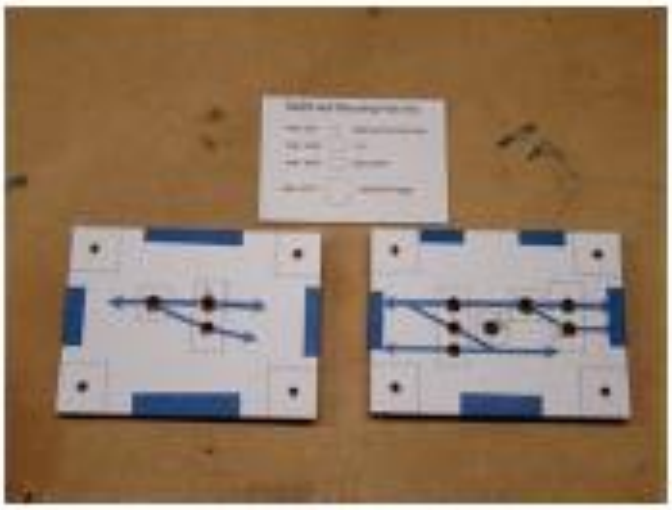

(Fig. 10)

The next step is to remove the plotting diagram from the hard-board face and clean up all of the holes with a sharp knife. Once this is done, I then add LED holders to the blocks I glued over the LED holes earlier. These allow me to hold the LEDs in place while I solder the leads and provide a way to replace any LEDs that go out in the future. (See figure 11)

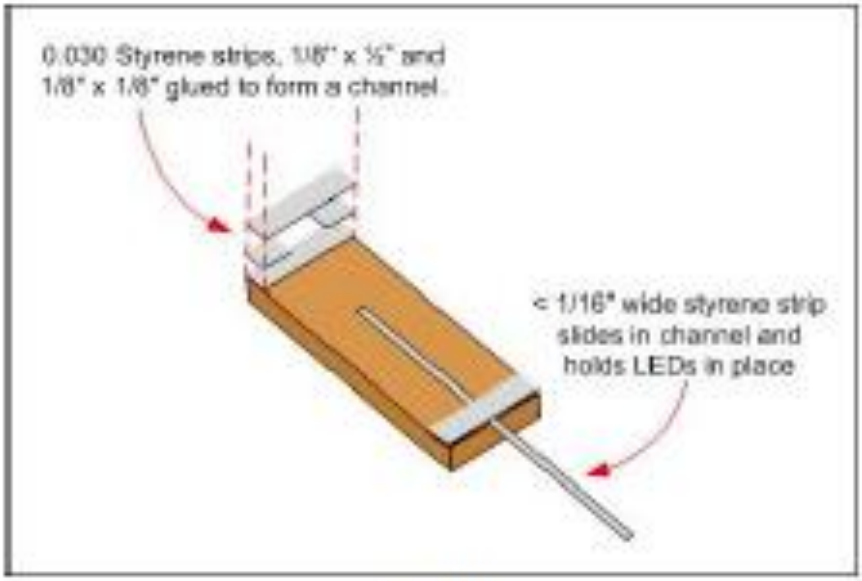

(Fig. 11)

You can see how these are used in figure 12 below. The panel on the left has LEDs held by the plastic strip.

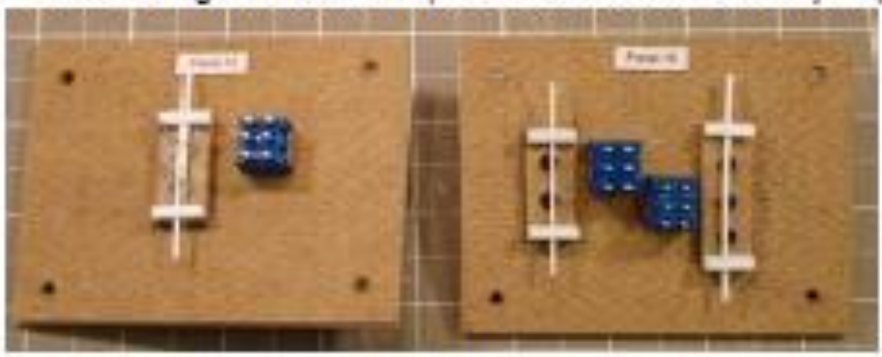

(Fig. 12)

Once this is done, I can now assemble the panel. I insert the switches into the hard-board back then I place the panel face on and finally the clear plastic cover (transparency). See figure 13 for completed panels.

(Fig. 13)

At this point, the only thing holding the panel together is the switches. Later on there will also be 4 mounting screws as well.

7

Back-Planes

The back-plane is what I use to break the wiring task down into separate parts. It's a relatively simple armature I create to wired my switch machines and shut-off blocks to. I also create a "face" that I print on sticker paper. I do this to label all of the input/output wires. I can test the switch machines via the back-plane w/o the control panel attached. I use European style terminal strips as they are plastic and can be cut into any number of terminals I need for a given control area. I also use cable ties threaded through cable staples. I do NOT hammer cable staples directly onto wires as they can be damaged. Figure 14 shows the back-plane concept.

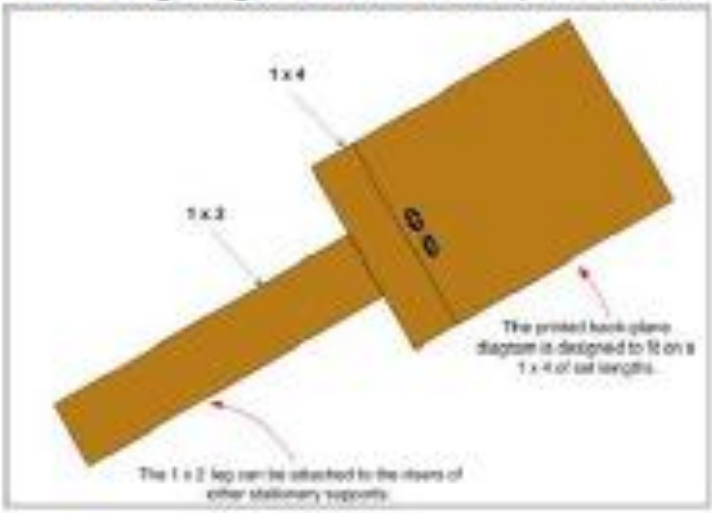

(Fig. 14)

The sticker face shows where the terminal strip and cable staples are placed. See figure 15 for an example.

(Fig. 15)

The idea here is to standardize the wiring approach so that every panel is wired the same way. In this case, the switch machine source comes in on the right and goes to the panel on the left side of the terminal strip. The output wires from the panel connect to the terminal strip on the right side and go out to the layout on the left. The next example shows 2 completed back-planes.

(Fig. 16)

9

Wiring

Now that we have all the components, let's talk about how to wire them together. The next example shows how the back-plane is initially wired to the switch machine.

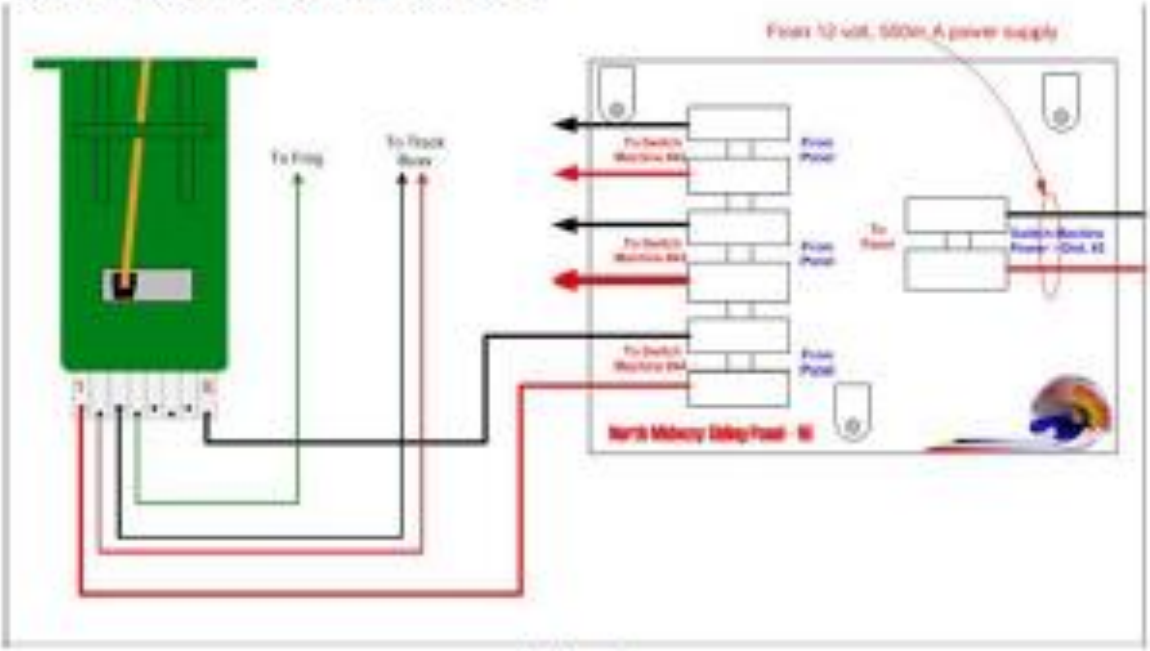

(Fig. 17)

Here we see the back-plane for panel #16 with 3 switches wired in. The input source from power district 3 is also shown. This also shows wiring to power a frog using the switch machines internal SPDT switch. The next diagram shows how I can easily wire in a DPDT switch to test the switch machine before we ever try to wire in the control panel itself.

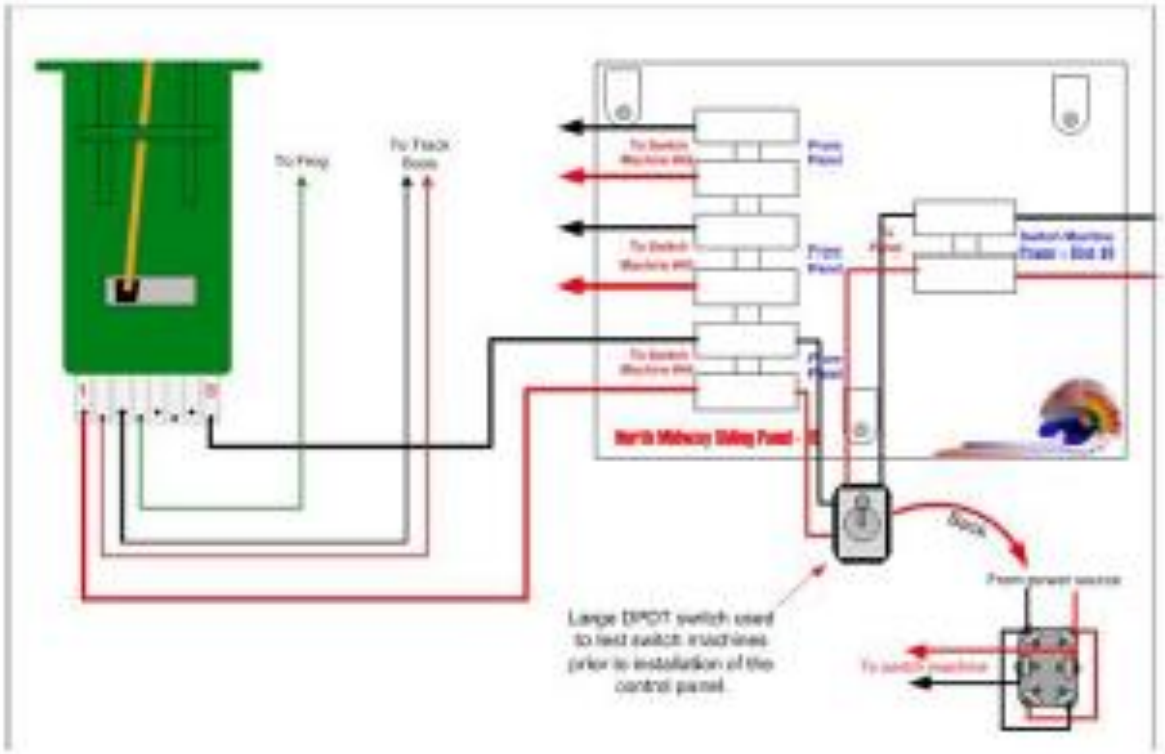

(Fig. 18)

Notice how the back of the DPDT switch is wired such that it changes polarity when thrown. The final diagram shows how the actual control panel is wired into the back-plane.

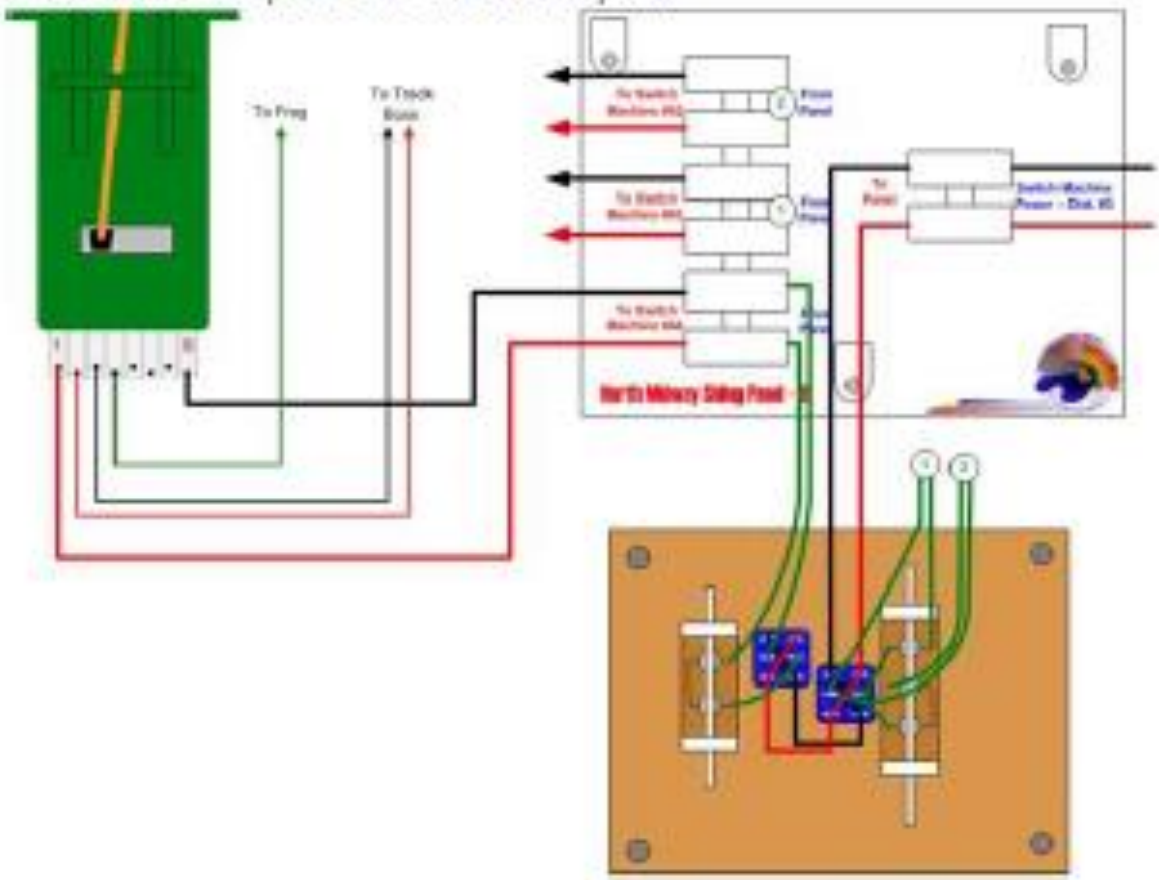

(Fig. 19)

I also use a temporary armature to hold the control panel until I can create the removable fascia that will have the panel pan installed into.

This is my approach to control panels, I hope you got some ideas from this clinic. In any case, if you can standardize your approach it will make it easier for you to trouble-shoot any problems that pop up and make it easier for your operators to use your panels if you plan to have operating sessions.

Brad Morneau, MMR
bmorneau@kc.rr.com

11

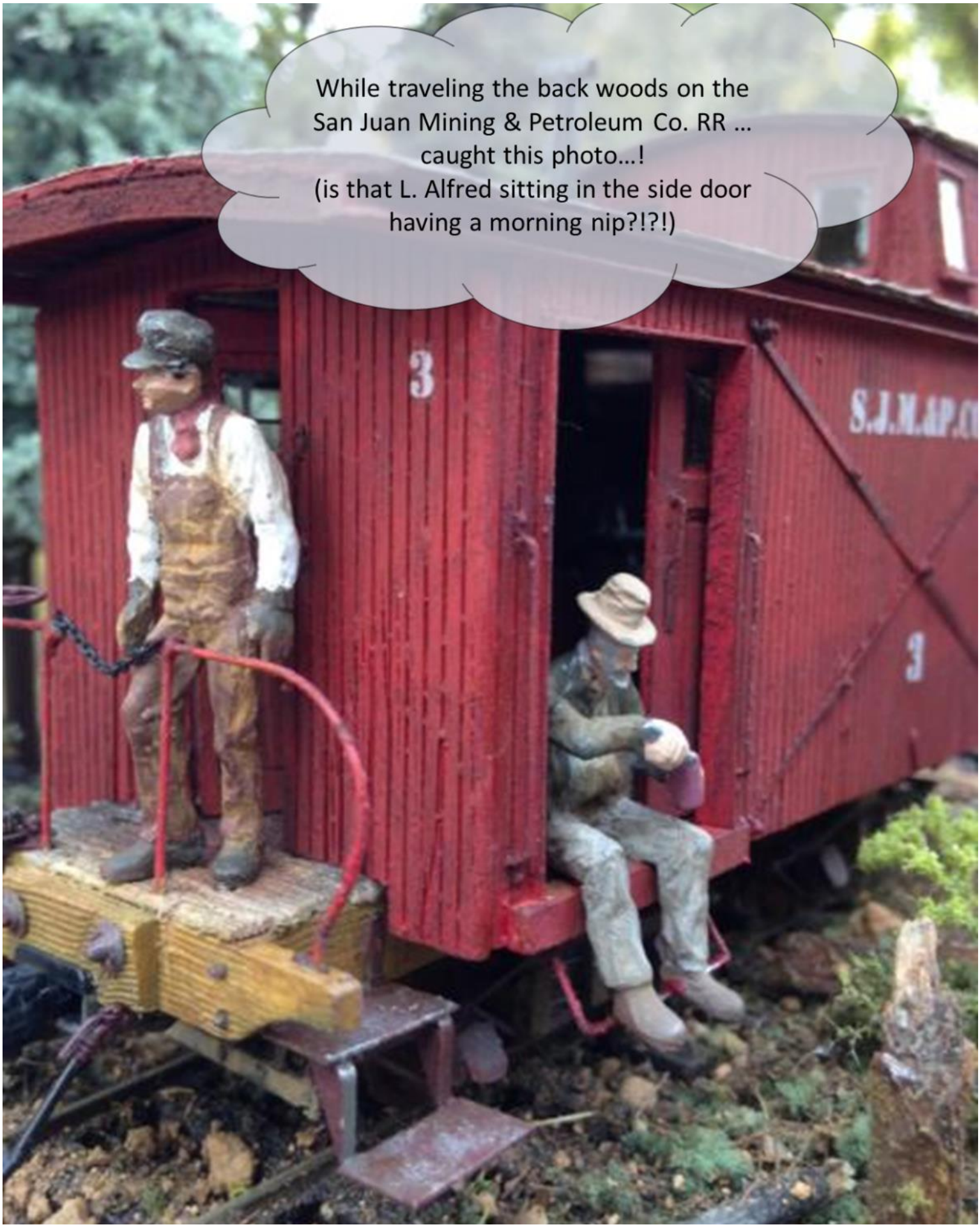
While traveling the back woods on the
San Juan Mining & Petroleum Co. RR …
caught this photo…!
(is that L. Alfred sitting in the side door
having a morning nip?!?!)
3
S.J.M.&P.Co
3

H.H. PLUMBING

Seriously Bad Elf
Winter Double Ale
RBCX-2005
Very Bad Elf
Special Reserve Ale
RBCX-2003
Don't Open 'Till ...Christmas!
Criminally Bad Elf
Barleywine Style Ale
RBCX-2004
So Bad It's Kept ...Behind Bars!

KANSAS CITY'S
HOME
FOR THE
HOLIDA
2013

KANSAS CITY'S
HOME
2013

nmra.org eBULLETIN

A few words from the President

Model Railroad Month in the 21st Century

November has traditionally been "Model Railroad Month." Not that you would notice, as our hobby has receded in the public mind. But that public disinterest is nothing new. Indeed, from the space race of the 1960's onward, model trains have been viewed by some as "quaint" or hopelessly out-dated.

We know better and slowly, so does the public. The September "Newsmax" magazine featured a major story on the technical advances in model railroading. From DCC to LCC and even Power on Board, the article covered the tech revolution that has occurred in our hobby over the past few decades. I recently screened a new documentary film, "Model Citizens," on model railroading produced by Sara Kelly. The film is well done and may re-awaken the public's interest in miniature trains. [*Ed. note: the NMRA made a Kickstarter donation to the making and completion of this film.*] Today's hobby is vastly different from the one I discovered in December 1961.

In those primitive days, my first engine, a tender-drive HO Tyco General 4-4-0, barely lurched around the circle of brass snap-track, powered by a rudimentary 12-volt transformer. The buildings were vacu-formed Blackman Wild West main street false fronts in garish colors. The scenery consisted of a combination of Life-Like trees and lichen bushes all on a grass mat. (You know, I can still smell that grass mat's distinctive odor.) *Model Trains* magazine opened my eyes to a world of possibilities beyond that beginner's train set and soon I was scratchbuilding a yard office out of Strathmore paper, and a grain elevator out of balsa wood. I still have that yard office. My first layout was inspired by an E.L. Moore article and built on a 5 foot by 9 foot ping pong table. It was horrible...but it was mine. And it ran, after a fashion, with primitive block wiring.

Since then, the hobby has changed remarkably and for the better. Today, advances only hinted at in the early 1960's such as "independent" train control are taken for granted. Digital sound and now the promise of Layout Command Control enhance the realism and ease of wiring. Each year it seems we enjoy some new advance increasing our enjoyment of the hobby and making our efforts more realistic. How ironic these advances come at a time when the hobby itself is threatened by changing social mores. Today, the competition for our attention has grown exponentially and any activity fights for attention. The internet has become omnipresent, and while it vastly improves our access to information, it also vastly occupies our limited time. I have written long and hard about the challenges we all face, so no more this time. Because, in spite of those challenges, we are all having a great time with the hobby and my only frustration lies in the fact more folks are not joining us.

So this month coming, enjoy the hobby and maybe, just maybe, see if you might find a friend or colleague who may be interested. The best way to grow the hobby is to show the hobby. That is what Model Railroad Month is all about. And yes, Model Railroading is fun!
Those are my thoughts; what are yours?

Charlie

SWITCH LIST December 2015

***new since last issue**

The Switch List contains all known Mid-Continent Region, NMRA, train shows and Division meetings. It also lists all known club shows and swap meets in the Mid-Continent Region (IA, IL, MO, AR, NE, KS, and OK). To list your event information please Email: l-seibel@comcast.net, or Mail Information: Louis Seibel, 1069 N Logan, Olathe, KS 66061. To subscribe, or unsubscribe, to The Switch List send an email to the above link. Look for us on the MCoR web site: www.mcor-nmra.org . **Please put me in your newsletter.**

DIVISION MEETINGS

Chisholm Trail Division First Tuesday of the month Evening Meeting at the Olivet Baptist Church
3440 West 13th St. No. • Wichita, KS 67203-4560 (13th Street North & High Street)
Begin gathering-6:45pm NMRA - meeting 7:00pm - 9:00pm
• Program Part I "Detailing Scenery & Buildings with Wood" presented by Pamela Todd
• Program Part II (Video Presentation) "The History of Grain Elevators: Praire Sentinels Information Alan A. Aagaard email alan.a.aagaard@gmail.com

COWBOY LINE DIVISION (NORFOLK, NE) meets 3rd Thursday each month, 7:00 P.M. at HyVee East upstairs meeting room. Corner of 1st Street and Norfolk, Ave. Info: Dennis M. Brandt Phone 402-992-2415 email dennisbrandt44@gmail.com

EASTERN IOWA DIVISION Tom Persoon is the Superintendent e-mail: persoont06@msn.com
For other division activities check out our website monthly at: https://sites.google.com/site/easterniowadivision/ or the division's Facebook Page at: Eastern Iowa Division

GATEWAY DIVISION (ST. LOUIS, MO) meets 3rd Monday each month, 7:00 P.M. Odd numbered months: Trinity Lutheran Church, 14088 Clayton Road at Woods Mill Rd (Hwy 141), Ballwin, MO; Even numbered months: VFW Hall, O'Fallon, IL http://www.gatewaynmra.org/division.htm

INDIAN NATIONS DIVISION Unless otherwise specified, all Indian Nations NMRA meets are held at the new Hardesty Library, 8316 E. 93rd. St., just east of Memorial Rd. in Tulsa, OK. The library opens at 9:00 am and the meetings start at 9:30 am. Web page: www.tulsanmra.org Superintendent - Dave Salamon (918)272-5512 or drs_rr@yahoo.com

KANSAS CENTRAL DIVISION Meetings are at 1:00 pm. For the full schedule check the MCoR website or email: boxcar75@wamego.net.

KATE SHELLEY DIVISION meets the 4th Thursday of every month except Nov. which we meet the 3rd. Dec. we have no meetings. Business meeting starts at 6 PM and at 7 PM we have a get together, anything railroad goes. The Library is at 515 Douglas Ave. Contact KSD thru the NMRA web site.

OK HEARTLAND DIVISION, NMRA meets in the even months in the Oklahoma City area. All who are interested in Model railroading are welcome. Info: www.okcnmra.org

PLATTE VALLEY DIV. (HASTINGS, GRAND ISLAND, and KEARNEY, NE) Meets quarterly in members' homes on a rotating basis or at sites of interest. New members are always welcome. Info: Todd L. Petersen, Div. Dir. 308-832-2200 or todd@gtmc.net

TURKEY CREEK DIVISION, NMRA, Turkey Creek Division Meeting December 15th ,at 7:00 pm We will meet in the Library at Hocker Grove Middle School 10400 Johnson, Shawnee, KS 66203-2895 Check the Division Timetable http://www.tc-nmra.org/TC-Calendar.html for current. Info: Louis Seibel, 913-393-3495 or 913-927-6850 L-seibel@comcast.net

WESTERN HERITAGE DIVISION (OMAHA, NE / COUNCIL BLUFFS, IA) meets second Saturday (except June and December) at noon in the Sump Library at 2nd & Washington Streets in Papillion (across from Runza). Visit www.whdnmra.info for more info and a map. The new web site is found at http://www.whd.mcor-nmra.org

WESTERN KANSAS DIVISION (GARDEN CITY, KS) Meets every Tuesday evening from 6:30 P.M. to 9:00 P.M. at 4091/2 N. Main St. (second floor above "Stage" department store, rear entrance from parking lot) 6 layouts on display (1-O27, 2-HO, 3-N) Operating sessions available Info: Robert Simmons, Division Director 620-521-3591 cell or 620-272-0444 Home e-mail:trainman55@hotmail.com : Facebook page "Western Kansas Division" also Western Kansas Division website: http://www.wkd-nmra.org

NEW
KANSAS CITY SOUTHERN HOLIDAY EXPRESS
The schedule for the KCS Holiday Express for this part of the country is:

10-Dec 4 p.m. Mexico MO 326 South Jefferson Street
12-Dec 4 p.m. Louisiana MO 30th Street
13-Dec 4 p.m. Roodhouse IL Depot
14-Dec 10 a.m.-3:30 p.m. St. Louis MO Union Station
15-Dec 4 p.m. Slater MO Depot
16-Dec 2 p.m.-5 p.m. (Open to Public) Kansas City MO Union Station
6 p.m.-8 p.m. (Private Event for KCS Employees and USKC Members)
17-Dec 12:00 p.m.-7 p.m. Kansas City MO Union Station
18-Dec 11:00 a.m.-8 p.m. Kansas City MO Union Station
19-Dec 9:30 a.m.-8 p.m. Kansas City MO Union Station
20-Dec 10:00 a.m.-5 p.m. Kansas City MO Union

Station

THE POLAR EXPRESS – BRISTOW, OKLAHOMA
Dancing chefs, singing elves and a special gift from Santa himself – all of this awaits you and your family aboard the Polar Express™ Train Ride departing from Bristow. Join the festivities on this round-trip train ride to the North Pole in your favorite jammies of course! Dates November 13-15, 20-22, 25, 27-29 December 1-23, 26-27
Times – 11:00, 1:00, 3:00, 5:30, 7:30
For information: www.easternflyerpolarexpressride.com

Monthly News in a Glance
NRHS
Friday, December 11 – Topeka Chapter, Lingo Livery Stable at Ward-Meade Historic Site, 124 NW Fillmore St., 7:00. Holiday social and election of officers
Friday, December 18 – Wichita Chapter, Great Plains Transportation Museum, 700 E. Douglas, 7:00. Slide free for all and election of officers. Informal dinner gathering: Riverside Café, 739 W. 13th, 5:30. For information: J. Harvey Koehn, jhkoehn@prodigy.net
Friday, December 25 – Kansas City Chapter, Union Station, Town Square Room, 7:00. Ed. note: I know, I know – that's Christmas day but I've not been given any other information). For information: John DeRoo, jderoo@planetkc.com
Divisions
Thursday, November 19 – Kate Shelley, 515 Douglas Ave., (town?), 6:00. Information: www.NMRA.com
Sunday, November 21 – Indian Nations, Hardesty Library, 8316 E. 93rd St., Tulsa, 9:30-12:30. Layout tour at a members' layout. Information: Dave Salaman, drs_rr@yahoo.com
Thursday, November 26 – Turkey Creek, Hocker Grove Middle School, Shawnee KS 7pm Library Louis Seibel l-seibel@comcat.net
Every Tuesday – Western Kansas, 409½ N. Main, 6:30-9:00. Information: Robert Simmons, trainman55@hotmail.com

NARVRE
Saturday, December 12 – Osawatomie, Whistle Stop Café, 901 6th St., 12:00 noon. For information: lswalker294@hughes.net
Monday, December 14 – Newton, Charlie's Restaurant, east room, I-135 & US-50, 11:30. For information: Ron Calbert, rcalbert@cox.net
Monday, December 14 – Abilene/Salina, Bayard's Café, 540 S. Broadway, Salina. For information: Tony Schmitt, asch9438@cox.net
Monday, December 14 – Parsons, The Chinese Chef, 900 N. 16th St., 11:30. For information: Jimmy W. Dodds, jimmywdodds@gmail.com
Monday, December 21 – Wichita, Best Western North, 915 E. 53rd N. (I-135), 11:00-1:30. For information: Tony Schmitt, asch9439@cox.net

MODEL RAILROAD CLUBS
Saturday-Sunday, December 12-13 & 26-27 – Wichita Toy Train Club, 130 S. Laura, Sat. 10:00-5:00, Sun. 1:00-5:00. $5.00 admission, child up to 12 free
Saturday, December 12 – Kansas Pacific Model Railroad, Ellis Museum, 911 Washington, 10:00. Lunch at a restaurant afterward. For information: Tom Robinson, rrailway@gbta.net
Thursday, December 17 – Kansas City Narrow Gaugers, at member's home, 7:00. For information: Dean Windsor, On3@worldnet.att.net
Sunday, December 20 – Heartland N-TRAK of Greater Kansas City, at member's home. For information: Dick Cooper, nscale@kc.rr.com
Monday, December 21 – Topeka Model Railroaders, Topeka/Shawnee Co. Public Library, 1515 SW 10th, 7:00. For information: Tony Fox, tfox57@gmail.com
Every Sunday – Weekend N-gineers, 16624 W. 126th St., Olathe, 1:00. For information: Ken Clark, hapheart@swbell.net
Every Sunday – Mid-Kansas Model Railroaders, 1130 E. Kansas, McPherson, 2:00-5:00. For information: John Snell, jsnell@cox.net
Every Monday – Garden City Model Trains, 408 N. Main, back entrance, 6:30. For information: Robert Simmons, trainman55@hotmail.com
Every Tuesday – Ozarks Model Railroad Association, 424 W. Commercial St., Springfield, MO, 7:00. For information: Ron Williams, rwilliams3129@gmail.com
Every Wednesday – Greater Kansas City Model Railroad Club, 6060 NW Waukomis Dr., Kansas City, MO, 7:00. For information: J. D. Spicher, jdspicher@aol.com or W. L. Ohrnell, wohrnell@sbcglobal.net
Add our website - www.cvmrc.com - we post the dates of our Sunday meetings on our main pag**Every Monday –** Garden City Model Trains, 408 N. Main, back entrance, 6:30. Information: Robert Simmons, trainman55@hotmail.com
Every Tuesday – Ozarks Model Railroad Association, 424 W. Commercial St., Springfield, MO. Information: Ron Williams, rwilliams3129@gmail.com
Ever Tuesday evening the Mexico Train Works Model RR Club meets (except at major holidays) @ 7pm at 415-B West Jackson Street, Mexico MO. We've been a club since 1990, and are in the basement of a local business, with an approximately 30x60' layout designed into 2 levels, connected by an eight-foot diameter helix. The Missouri Texas & Western comprises two railroads, the first is the Missouri, Texas & Western which runs from Des Moines, Iowa to Houston, Texas. The second line is the Chicago, Kansas City & Western which runs from Chicago, Illinois to St. Louis, and then on to Kansas City, Missouri. The CKC&W is owned by the MTW and they share a small amount of trackage at one location. The major portion of the railroad we model is the line from the Missouri River in central Missouri, south to Parsons, KS. The website is www.mexicotrains.com and you can reach John Johnson, President @ info@mexicotrains.com or phone 573-581-8013**Every Wednesday –** Greater Kansas City Model Railroad Club, 6060 NW Waukomis Dr., Kansas City, MO, 7:00. Information: J. D. Spicher, jdspicher@aol.com or W. L. Ohrnell, wohrnell@sbcglobal.net
Every Wednesday – Greater Kansas City Model Railroad Club, 6060 NW Waukomis Dr., Kansas City, MO, 7:00. For information: J. D. Spicher, jdspicher@aol.com or W. L. Ohrnell, wohrnell@sbcglobal.net
Add our website - www.cvmrc.com
Every Other Every Wednesday– Kansas City Society of Model Engineers, Wed. 7:00-9:00 E-mail for Information: Steven Boeck, sjboeck@att.net
Every Thursday – North East Kansas Model Railroaders, HO gauge, 7:00. Information: Otto Wick, 913-367-7536, or Steve Schaefer, 913-367-6202
Every 2nd & 4th Saturday-Sunday – Wichita Toy Train Club, 130 S. Laura, Sat. 10:00-5:00, Sun. 1:00-5:00. $5.00 admission, child up to 12 free
Every Saturday – Boothill Model Railroad. Information: Robert Simmons, trainman55@hotmail.com
Every Saturday – Heartland N-Trak of Greater Kansas City,

131 S. Water, Liberty, MO, 11:00-3:00. Meetings 1st Sunday at the clubhouse. Information: Dick Cooper, nscale05@gmail.com
First and Third Sunday - Cherry Valley Model Railroad Club, Leatherock Hotel Center, 420 North Depot Street, Cherryvale, KS 1:00 PM. Information contact John Dhooghe, john@cvmrc.com
Add our website - www.cvmrc.com - we post the dates of our Sunday meetings on our main page
Every Saturday-Sunday – North East Kansas Model Railroaders, 12" scale, 1440 N. 6th St., Atchison, Sat. 10:00-4:00, Sun. 12:00-4:00. Information: Otto Wick, 913-367-7536, or Steve Schaefer, 913-367-6202 (Ed. note: should this club be listed under Garden Railroads?)

Meetings GARDEN RAILROADS
Saturday, December 19 – Wichita Area Garden Railway Society, at member's homes. For information: Claudia Rollstin, Claudia@gardenrailwaygizmos.com
Sunday, December 27 – Northeast Kansas, at member's layout. For information: Tedy Bellos, petedy@everestkc.net
Thursday, December 31 – Tulsa Garden Railroad Club, Freewill Baptist Church, 1190 N. Mingo Rd., Tulsa, OK, 7:00. For information: info@tulsarailroadclub.org

HISTORICAL CLUBS
Saturday-Sunday, November 7-8 – Arkansas City Train Show, Agri-Business Bldg., 712 W. Washington, Sat. 9:00-4:00, Sun. 10:00-3:00. Adult $5, child 12 & under free; $1 off with food item. Information: Javen Schmucker, javen1927@gmail.com
Saturday, November 28 – Joplin Museum Complex Train Show, Joplin Museum Complex, 7th & Schifferdecker St's., Joplin, MO 9:00-3:00. Adult $3, child 12 & under free. Information: Rick Gardner, rickgardner4449@gmail.com
Saturday, November 28 – Mid-America Train & Toy Show, KCI Expo Center, 11730 N. Ambassador Dr., Kansas City, MO. Information: Javen Schmucker, javen1927@gmail.com
Saturday-Sunday, February 6-7 – Wichita Train Show, Cessna Activity Center, 2744 George Washington Blvd, Wichita, Sat. 9:00-6:00, Sun. 11:00-4:00, adult $8, child 10 & under free, $1 off with food item. Information: Phil Aylward, aylward1@cox.net

SHOWS and CONVENTIONS

SHOWS FOR 2016

NEW
March 5 & 6, 2016 World's Greatest Hobby Train Show Kansas City, MO American Royal Complex, 1701 American Royal Ct., Kansas City, Mo 64102. The World's Greatest Hobby on Tour showcases the hobby of model railroading. Sponsored by the Hobby Manufacturer's Association - Model Railroad Division and by the World's Greatest Hobby Program, the show is intended to introduce the general public to model railroading in an entertaining, lively and family-friendly atmosphere. The hobby of model railroading has a unique ability to bring the family together in activities that teach many skills. Model railroad skills span from carpentry to artistry, from electrical engineering to historical research. Model railroading is truly the World's Greatest Hobby Train Show Inc. World's Greatest Hobby on Tour 280 Carlton Drive Carol Stream IL 60188 Phone: 630.279.5094 Fax: 240.597.4482 E-mail: info@wghshow.com

NEW

April 16th, OMRA has had to move its 2016 Spring Train Show Springfield Expo Center, 635 E. St. Louis St., Springfield, MO.

NEW
June 2-5, 2016 Road to Omaha, 2016 Mid-Continent Regional Convention. Headquarters hotel will be Hilton Garden Inn. Train show will be at Ralston, Nebraska Arena, The Nebraska-Iowa Railroaders annual train show and swap meet details to follow soon and will be available on the Western Heritage Division website: http://whd.mcor-nmra.org
Henry Nipper Convention Chairman

NEW
Tuesday-Sunday, June 21-26 – Santa Fe Railway Historical & Modeling Society 2016 Convention, Marriott East Motel, 9100 Corporate Hills Dr., US-54 & I-35,
Wichita. Registration $150 before May 1 -- $165 after; non-members $165 before May 1 -- $180 after. Schedule: Wed. – excursion behind steam 3415, Abilene, and tour of Eisenhower Museum; Thur. – excursion on former BNSF Railway, now SKOL, from Winfield to Moline, tour Great Plains Transportation Museum in Wichita with BBQ lunch. Amtrak comes as close as Newton. Numerous Santa Fe depots in area and steam locomotives on display; special spouses activities by trolley on Friday. For information: www.atsfrr.net

NEW
June 29-July 3, 2016 National N Scale Convention Hosted by the N Scale Enthusiast
Welcome to the 24th National N Scale convention hosted by the N-Scale Enthusiast. The official convention start date is Wednesday, June 29, 2016th but as in the past we are working on preconvention events so plan to be in Kansas City by Tuesday morning, June 28. Convention registration will start the 1st week of December 2015. Sheraton Overland Park Hotel at the Convention Center Phone: 913-234-2100 6100 College Boulevard, Overland Park, Kansas, 66211 Special Convention Hotel Reservation Page Click Here

TRAIN RIDES
Friday, December 11 – Santa Claus Express, Midland Railway, 7:00 p.m.
Saturday-Sunday, December 12-13 – Santa Claus Express, Midland Railway, 10:00 – 1:00
Later details this fall on website: www.midlandrailway.org

Special Events
Every Weekend – Kansas Belle Dinner Train, Midland Railway, Baldwin City. Information: www.kansasbelle.com

The Switch List is a service of Mid-Continent Region, NMRA.